VertiClip® Splice Installation Instructions
Vertical Deflection @ Structure Bypass

Standard Step Bushing
(Do not remove
from slots unless
otherwise directed)

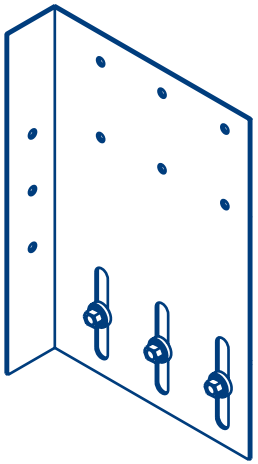

VertiClip® Splice

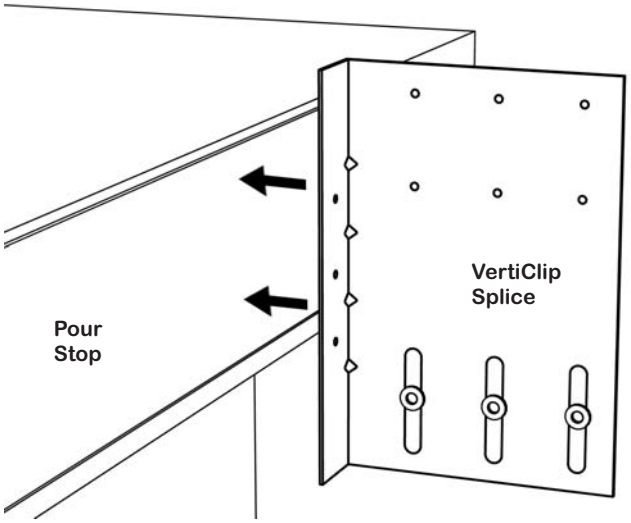

Attachment to Structure per
Design Specifications

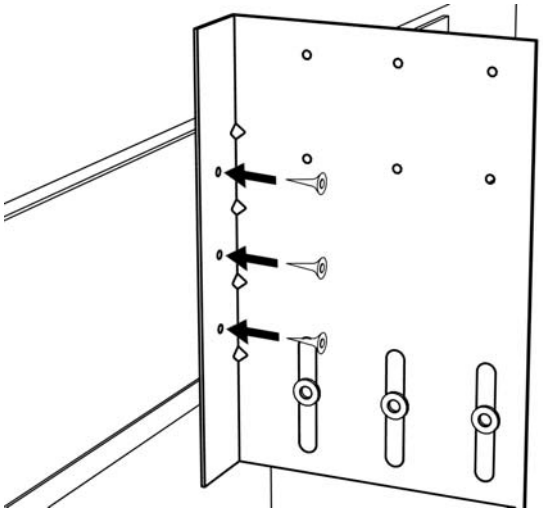

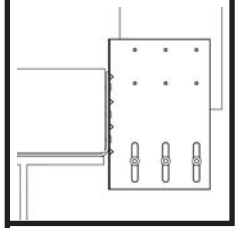

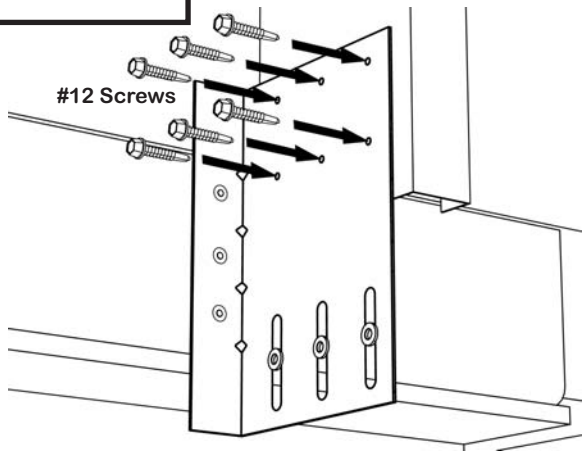

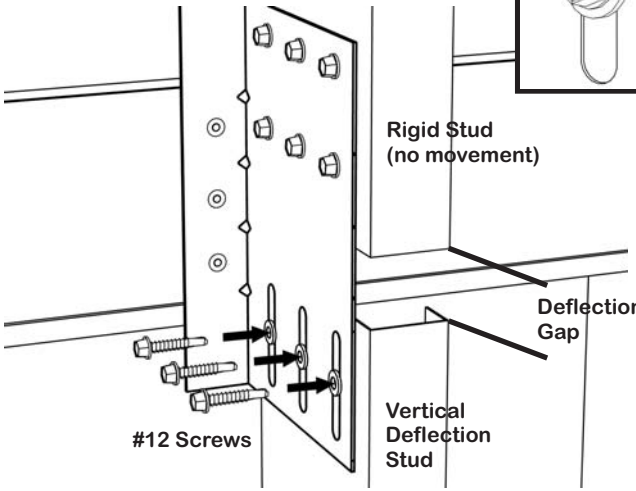

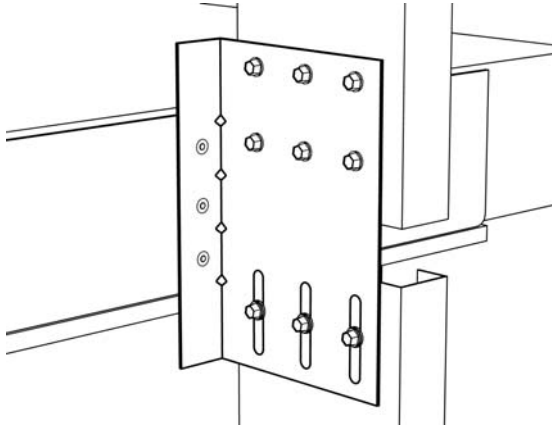

© 2005 The Steel Network, Inc. All Rights Reserved

US Patents #5,467,566 & #5,904,023

Products in this catalog are designed and manufactured for the specific purposes shown, and should not be used in other applications unless approved by a qualified design professional. All modifications to products or changes in installation procedures should be made by a qualified design professional. The performance of such modified products or altered installation procedures is the sole responsibility of the design professional or installation contractor. The installation contractor is responsible for installing all products in accordance with relevant specifications and building codes.